Issue No. 9972-7157100

Pipe reel

7157

Instructions



Table of Contents

General	3
Safety rules	4
Introduction	7
Technical data	7
Parts	8
Handling	9
Operation	12
Transport / Storage	12
Spare parts	13
Maintenance schedule	14
EC Declaration	15

Thank you for choosing a SAHLINS product!

We want you to be satisfied with your equipment, this instruction manual has been written to help you safely handle and maintain it. We want you to read it carefully before using the equipment so that you are aware of the safety precautions you need to take when using it.

General

During the design and manufacture of the equipment, great care has been taken to avoid risks from a health and safety point of view.

There are risks associated with cable and line work, and in order to eliminate these, it is important to
Important that:

- Instructions are studied and followed

-staff are continuously trained in care and safety

-appropriate equipment and tools are available

-The owner and supervisor are responsible for ensuring that effective safety programs and regulations are developed and followed by all personnel.

Our instructions contain important information that all users should know and understand before using the equipment. For Your safety and that of others, You shall pay special attention to the items/sections that have the following headings:

WARNING!

Important information warning you of the risk of serious injury or danger to life if the instructions are not followed.

CAUTION

Important information describing how to prevent damage to machinery and equipment or how to avoid a situation that could cause injury.

NOTE

Advisory information regarding the operation, care and maintenance of machinery and equipment.

Safety rules

Staff safety

1. Read and familiarize yourself with all warnings, precautions and instructions in the use and care instructions, as well as read and learn the meaning of all signs that are on and around the equipment. If in doubt, make sure to get answers to all questions before the work begins.

2. Do not operate machinery or equipment if you are under the influence of alcohol, strong medications, sedatives, or other drugs that may make you less alert or affect your judgment.

3. Take safety precautions to prevent hair or loose clothing items from getting caught in moving parts or controls.

4. If possible, always wear protective gloves to protect hands and fingers from cuts, burns and solvents.

5. Always wear safety goggles whenever there is a risk of flying particles, splinters, dust or other objects that could damage the eyes and when safety regulations require this.

6. Always wear a safety helmet and safety shoes when working that requires them.

7. Always wear hearing protection in a working area with a high noise level.

Safety in the workplace

8. Keep the work area clean and free of material accumulations.

9. Do not allow unauthorized personnel to be in or around the work area. Always have full control over who is there.

10. Surfaces touched with hands or feet must be kept clean, dry and free from oil or grease.

11. Store parts and tools in the designated place when not in use.

12. Do not stand under or allow anyone else to stand under equipment that is raised or suspended.

13. Find out about the weight limitations of ropes and lifting devices and the free movement space that
required for these.

Safety of equipment.

14. Warning, prohibition and information signs must not be hidden, altered, damaged or removed.

15. Before setting up portable equipment, it must be ensured that the ground surface is firm and level. Check that the supports and locks are securely in place. Follow the instructions for locking and setting up equipment where applicable.

16. Before transporting portable equipment, check that brakes and traffic lights are working. Ensure that supports are sufficiently elevated from the ground so that transport can take place safely. Check that there are no loose parts that could fall off during transport.

17. Check components of the equipment before each operation to ensure that no parts are damaged or suspected of being damaged. Repair or replace damaged parts or parts that may be suspected of being damaged. Repair or replace damaged parts before starting and operating the equipment. Use only original parts.

18. Before starting and operating the equipment, care must be taken to ensure that no persons, animals, tools, parts or other foreign objects are in, on, under or around it. Check that all protective and safety equipment is properly installed and in satisfactory condition.

19. Do not allow untrained personnel to start or operate any equipment without the guidance of a
Established operator.

20 Never leave the equipment unattended and unattended.

21. Be alert during start-up and operation for faulty measuring instruments, visible defects, odors, or unusual noises that may be a warning of a fault. Stop the equipment immediately if any fault is suspected.

22. Perform all inspection, maintenance, lubrication, and adjustment with great care and according to the manufacturer's recommendations. The machine must always be stopped during maintenance work.

Safety of flammable and environmentally hazardous substances.

23. Store flammable, flammable and dangerous substances in a safe place and for this purpose
seen containers. These must be clearly marked in accordance with current regulations.

24. Do not allow smoking or open flames/flames in the vicinity of fuel and oil tanks and other flammable substances.

25. Turn off all engines when adding oil and fuel. Follow the regulations and recommendations that apply when handling these substances.

26. Never start a diesel or gasoline engine in an enclosed space unless this is properly ventilated. Dangerous gases can kill.

27. Do not use flammable and/or combustible substances such as gasoline, kerosene, or diesel fuel to clean parts. Always use non-flammable solvents that are intended for cleaning.

Safety of hydraulic systems

28. Do not perform any maintenance on components in hydraulic systems without

first depressurizing the system.

29. Do not perform internal checks on oil systems before the system has been depressurized. Pressurized oil can be dangerous if the pressure is incorrectly relieved.
Oil can become very hot during operation. Wait until the system is cooled down before carrying out any work.

30. Do not disassemble a hydraulic cylinder from its connections until the system is depressurized.

31. Do not operate pressure systems with worn or damaged hoses, valves, and seals. Replace damaged components before the system is put back into operation.

32. Do not attempt to disassemble hydraulic cylinders or other hydraulic equipment unless you are trained to perform such work.

33. Never adjust the pressure settings in hydraulic systems beyond recommended values.

34. Follow the manufacturer's recommended inspection and maintenance instructions for pressure systems to ensure that safe conditions exist during operation.

Introduction

The Pipe Reel 7157 is a flexible and easy-to-use tool for pulling out and handling cable protection pipes on a ring. The reel has a sturdy construction and is adjustable to accommodate most dimensions of rings.

To make it easy to rotate when pulling, the heavy-duty lifting eye is equipped with a ball-bearing swivel.

Furthermore, the pipe reel has an articulated roller to guide the pipe in a controlled manner. The roller is mounted on an adjustable arm to be able to adapt the position to the current ring diameter.

When stored and transported, the reel can be dismantled so that it does not take up a larger space than a EUR pallet.

Technical data

Model	7157
Net weight	250 kg
Max. load	880 kg
Dimensions of ring:	
Minimum outer diameter	3179 mm
Largest Outer Diameter	3659 mm
Minimum inner diameter	1540 mm
Largest inner diameter	2780 mm
Maximum width	1200 mm
Dimensions in "storage mode":	
Height	2050 mm
Duration	943 mm
Width	750 mm

Parts

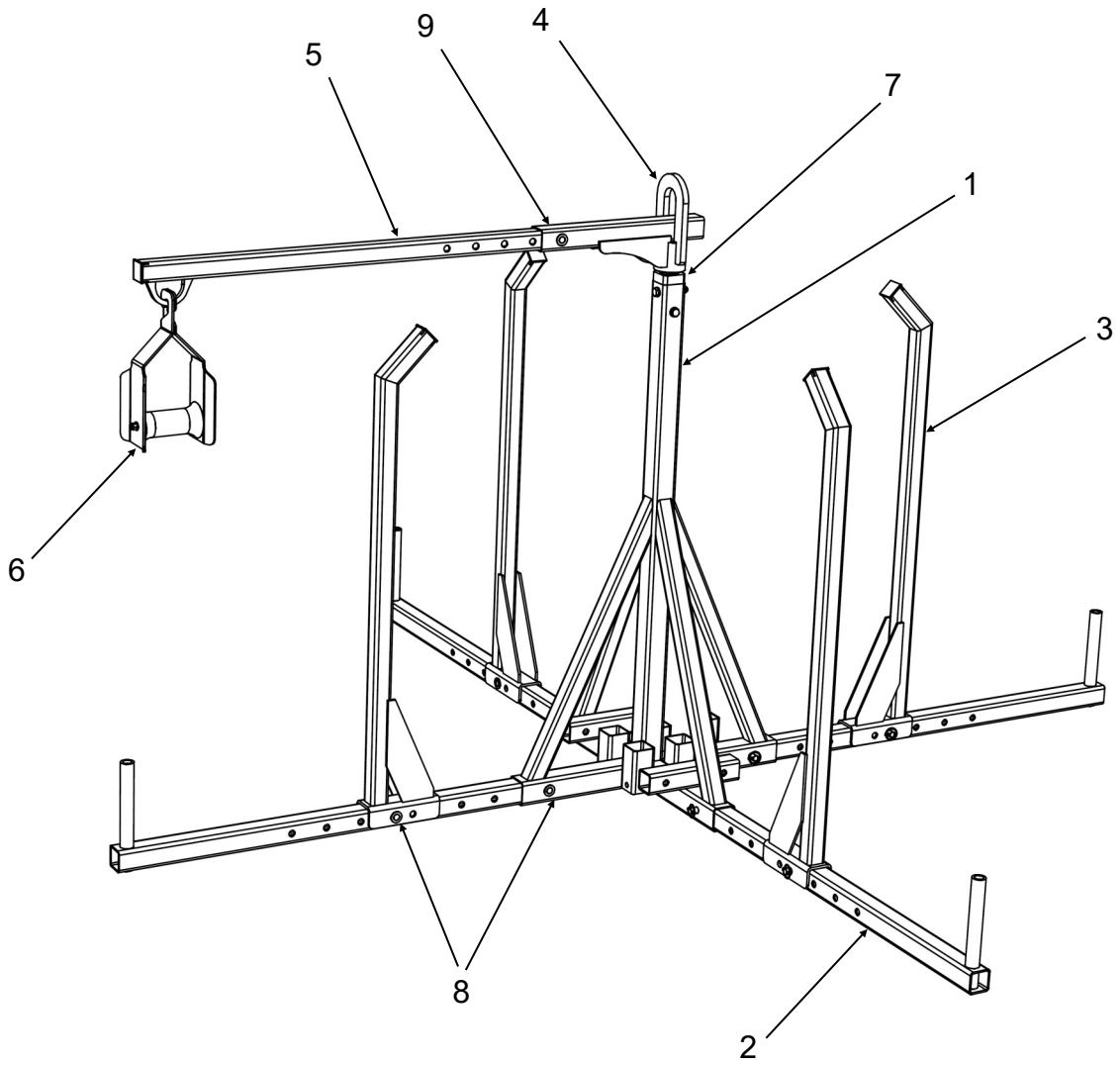

The pipe reel contains the following

1. Stand (1pc)
2. Wishbone (4 pcs)
3. Support (4 pcs)
4. Lifting
5.
6. Hanging roll (1 pc)
7. Axle pin (1 pc)
8. Sprint (8)

Handling

On delivery, the hose reel is mounted in the "storage mode" and then has an outer dimension that is no larger than a standard pallet. This makes it efficient to transport and store.

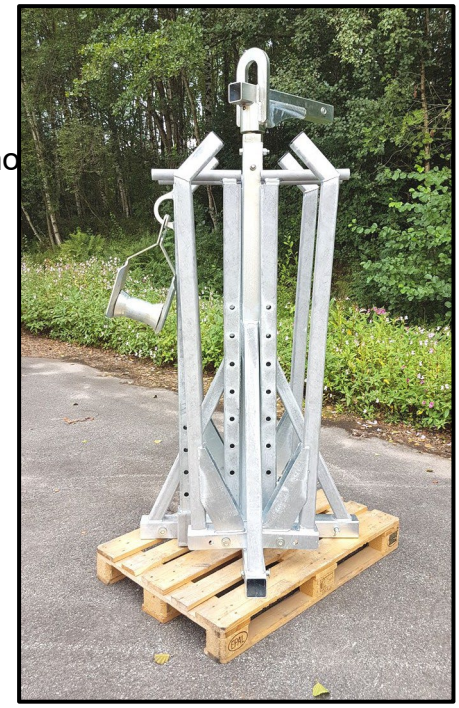

Assembly:

Start assembly to "operating mode" by checking that all parts are present and that they are not damaged.

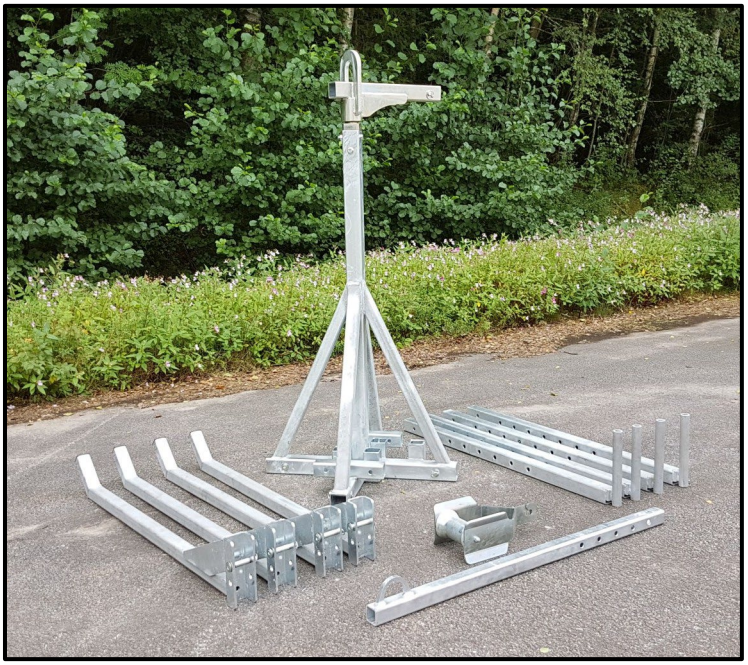

Check that the lifting eye can rotate easily and smoothly, this is important to be able to get a good result when rolling out.



Install the four support arms and lock with the pins. Use the position that best matches the outer diameter of the ring of cable protection pipe in question.

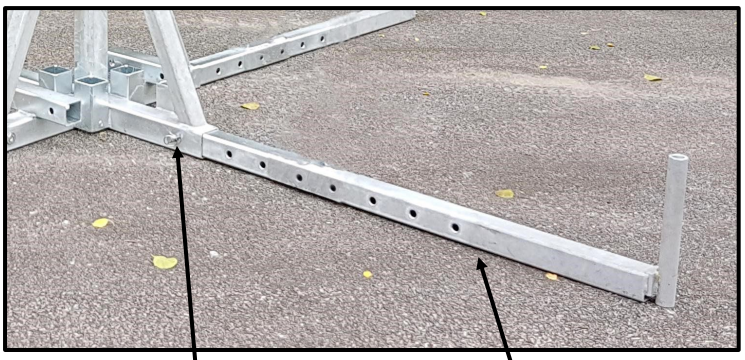

Then install the four supports. Place these in their innermost position



With the help of e.g. a mobile crane or similar, the ring with cable protection pipes is lifted into place.



Move the supports out as close to the ring as possible, and lock in place with the pins.



Assemble the arm and hanging roller. Adjust the length of the arm so that the hanging roller ends up at the outer diameter of the ring. Lock in place with pins.



Operation

WARNING!

When the pipe reel is loaded, only lifting may take place in the lifting loop of the center piece.

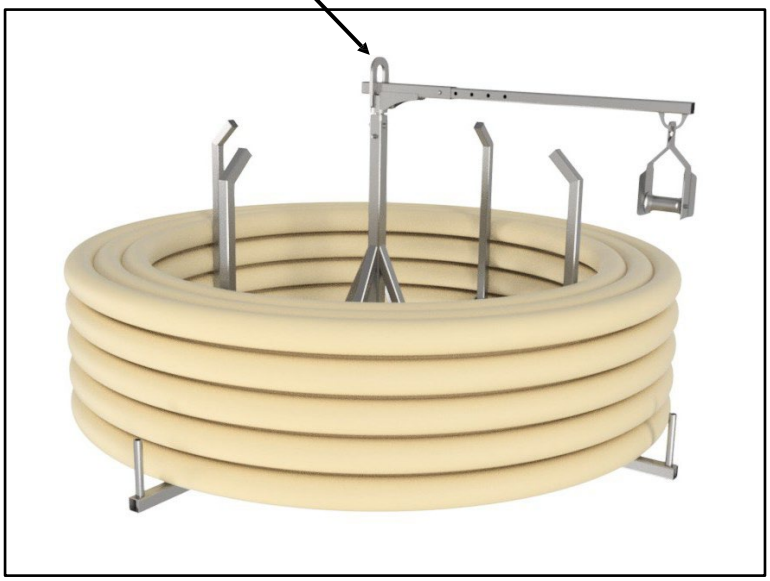

Transport / Storage

When stored or transported, the pipe reel is most suitable for dismantling to the "storage position" and placed on a pallet.

When stored for longer periods, the storage point be clean and dry.



Spare parts

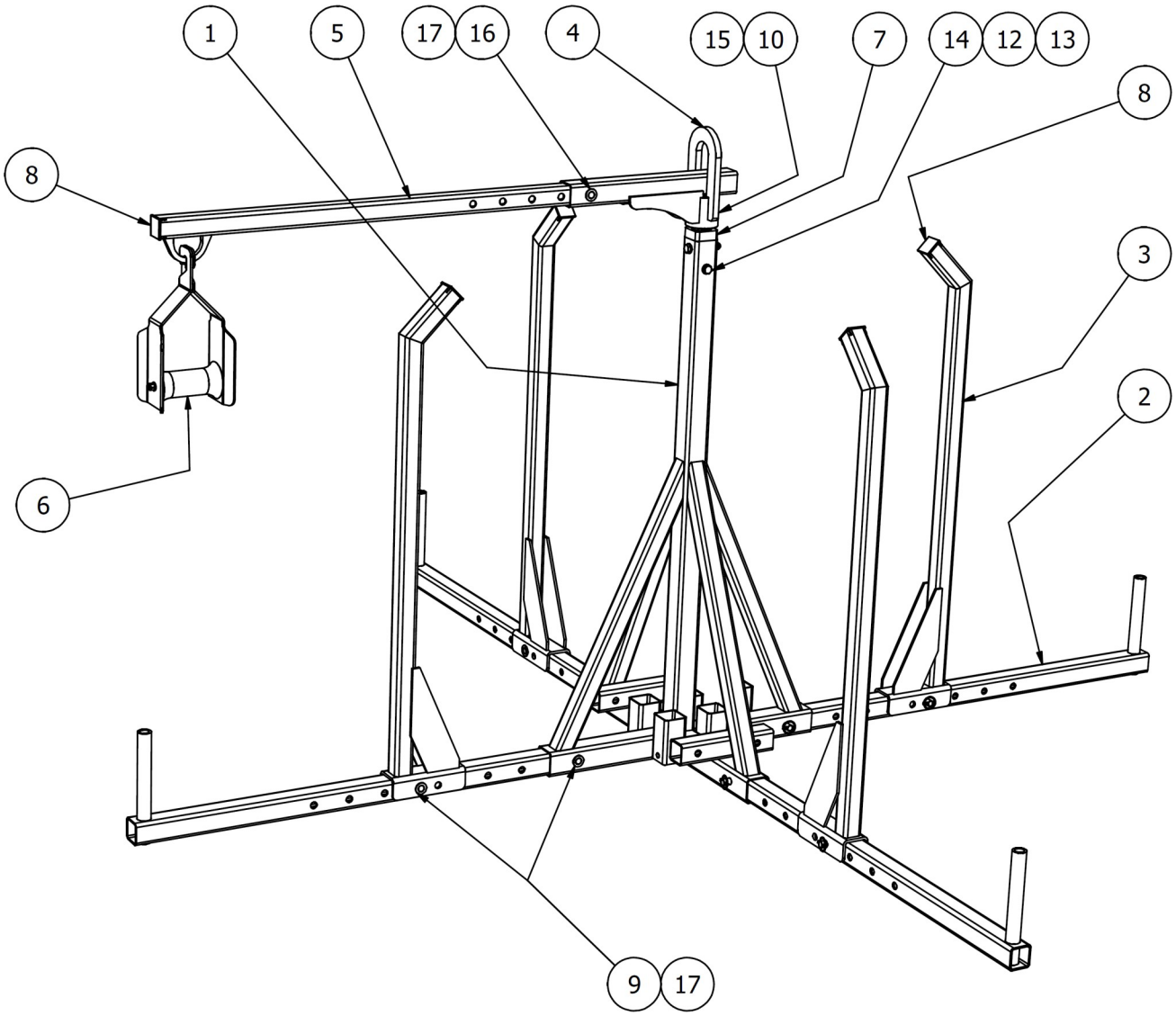

DETAIL	QUANTITY	ARTICLE NUMBER	NAME
1	1	7157-5000	TRIPOD
2	4	7157-5001	SUPPORT ARM
3	4	7157-5002	SUPPORT
4	1	7157-5003	CENTER BIT
5	2	7157-5004	ARM
6	2	7157-5005	HANGING REEL
7	1	7157-5006	AXELT TAB
8	6	9521-60604	PLASTIC PLUG 60x60
9	8	4700-5016	SPRINT
10	1	9551-06	LUBRICATION NIPPLE M6
11	2	9379-050	STOP SCREW T6SS M6x16
12	4	9441-170	TRAY BRB 17/30x3
13	2	9422-16	LOCK NUT NYLOC M16
14	2	9361-16110	SCREW M6S M16x110
15	62	9205-060	STEEL BALL Ø6
16	1	2240-5057	SPRINT
17	13	9343-04532	RING PIN 4.5x32

Maintenance schedule

	Action	Each Walking	Each Month or 20 hours
Stands / Arms / Supports	Control	**X**	
Ball-bearing swivel	Control	**X**	
Ball-bearing swivel	Lubrication		**X**
Hanging reel	Control	**X**	

Lubrication Points

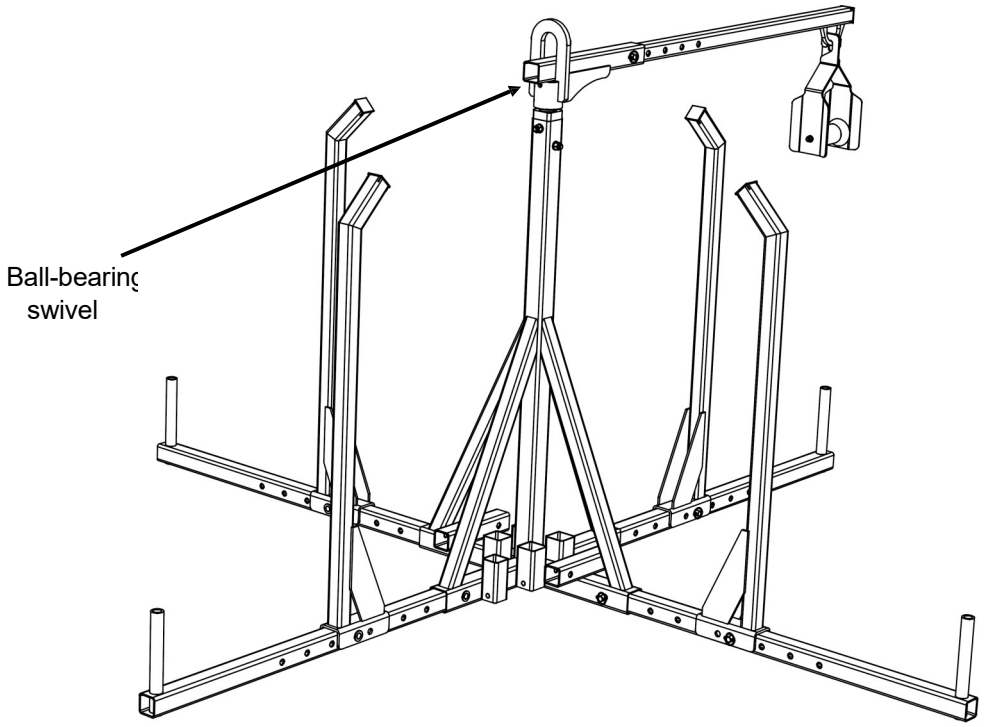

EC assurance of conformity

E·C declaration ,of confo,cmit

We certify, as a.v. manufacturer, that the following product complies with all the applicable provisions of 2006142/EC.

We declare, as a manufacturer that lhe foUawing prodm; t meets all applic.able provisions of 2006142 I EC

Aftiilool number *Arlicla nr.1mti!!' I"*	**7157-000,Q**
B- turnmnimg	Rörvinda 7157

Applied::harmonizing st.äll'iderdet *! AppJied hermonfs.ed' standard§_*

AinckaiJillärnpade stand_er_.odlJ; r; iecifikaöoneri *othar* *appJied sumdtJrds an.d ooeoilfcafions*

Competent au sami'll'lansläilla technical ddkumentartion *I Ai; thorf§.eJI* ro *cpmpife techriical documentelion*

Namlil N.ame	Signed Unders1gned	MI\E:S!. lAddress	According to below / As Lbelow

Ort *Town/City*	Holsljunga	Dalum *Dafe*	2019-03-11
Name 'l'l.:lme			
Namnförtydligande *Name in block letters*	Stefam Svensson		

r nnl s
. Posi/iori *VDICEO*

Sahlins Sweden AB

Företagsvägen 2

512 64 Holsljunga

Tel. 0320 – 20 93 30

Fax. 0320 – 319 38

www.sahlins.com

2018.08